Practical no: 8
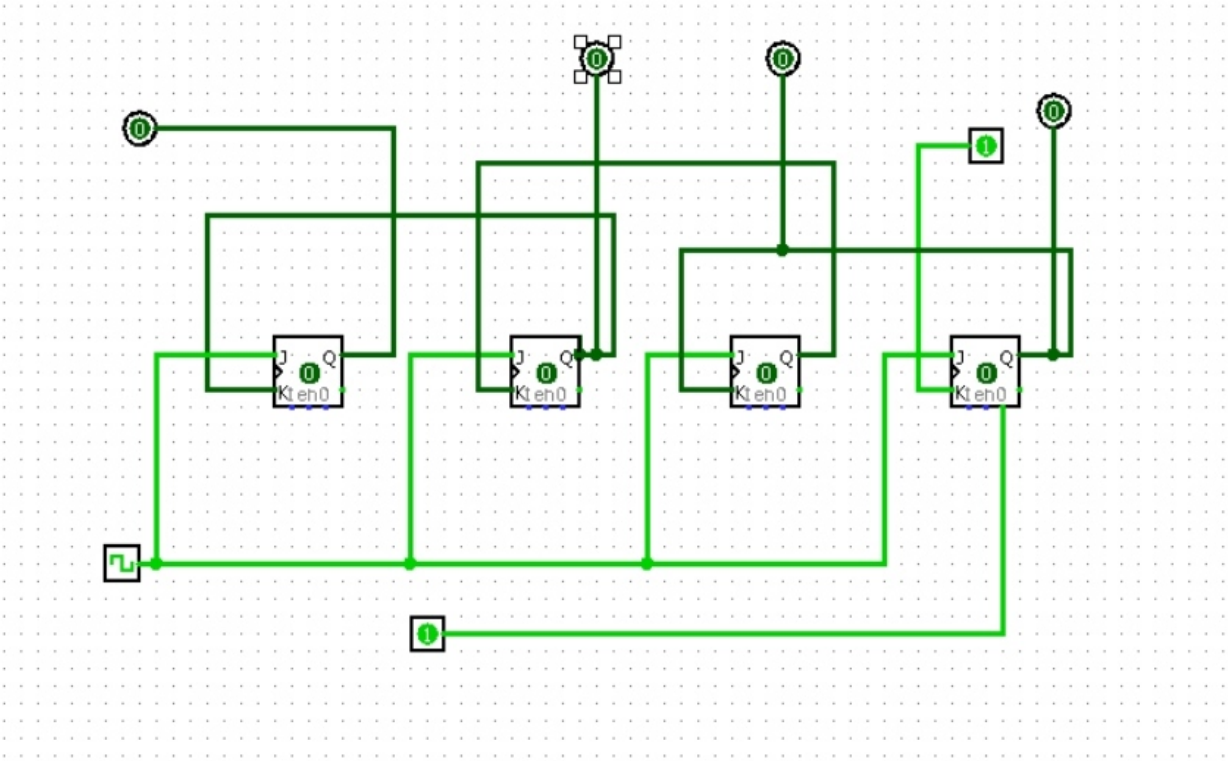
AIM:- To verify the operations of a 4-bit shift register using logism.